QUICKPLAY

TEKKERS GS TRAINER 3 IN 1

Instructions

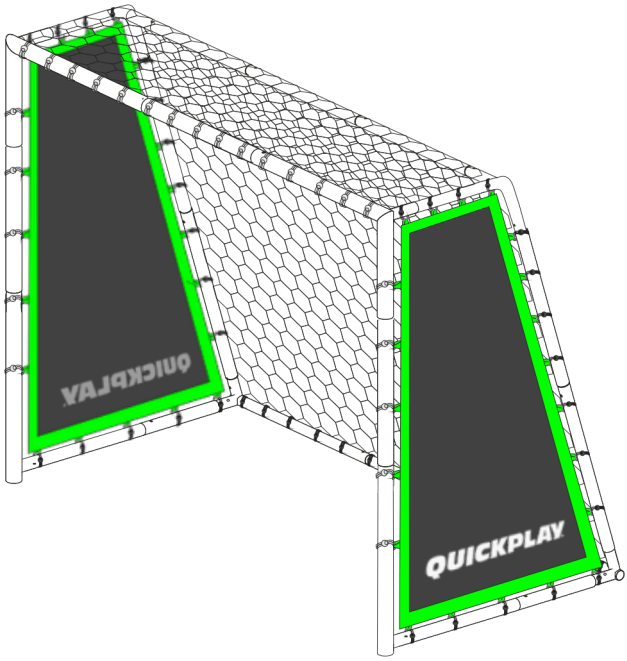



GOT AN ISSUE?

CONTACT US

footballsupplies@socceruniteD.co.nz

STEP 1

FRAME ASSEMBLY

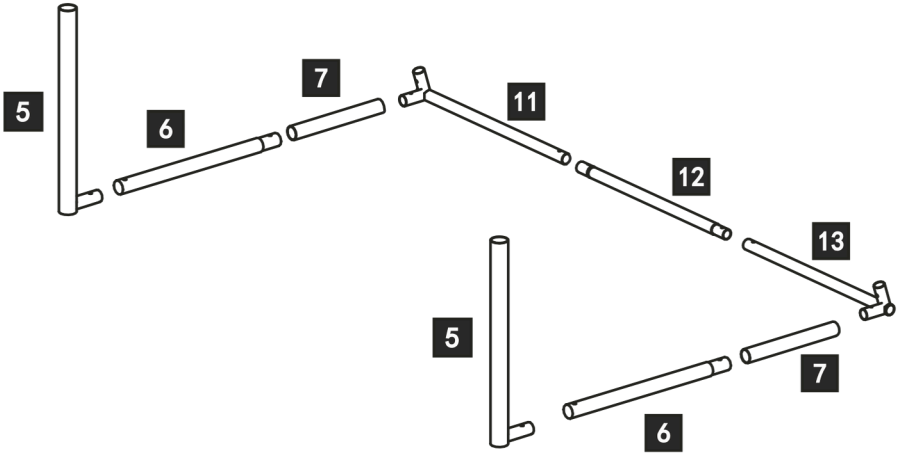

STEP 2

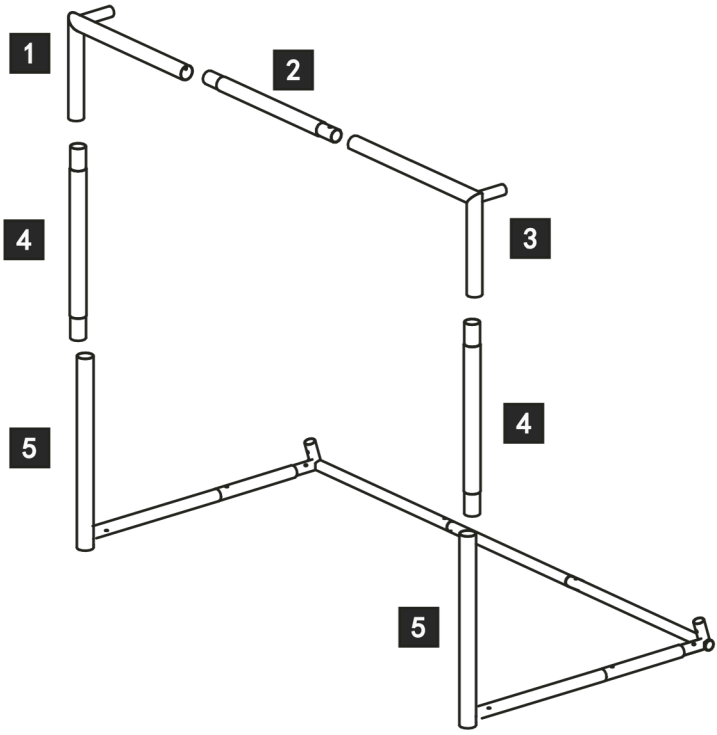

FRAME ASSEMBLY

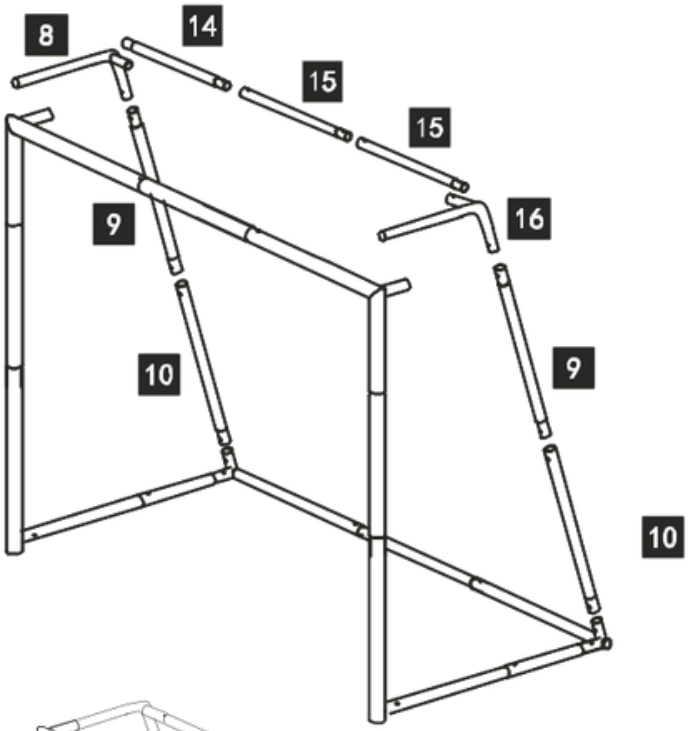

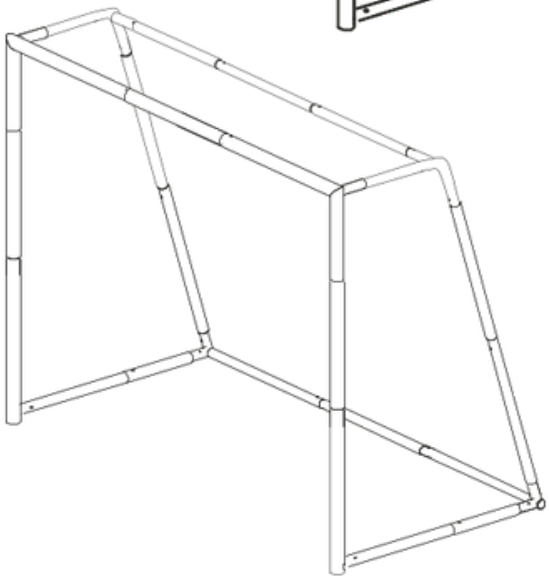

STEP 4

SIDE PANEL ATTACHMENT

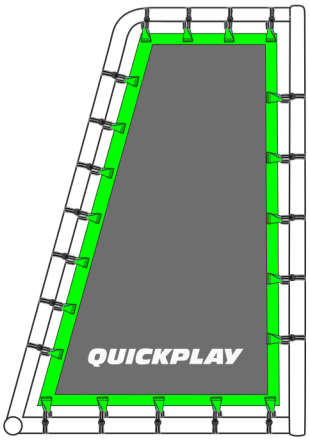

1 Attach the side panels to either side of the frame. Place a bungee through each tab and around the frame.

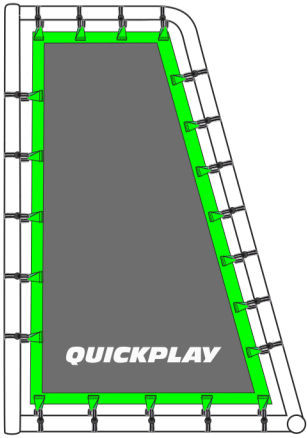

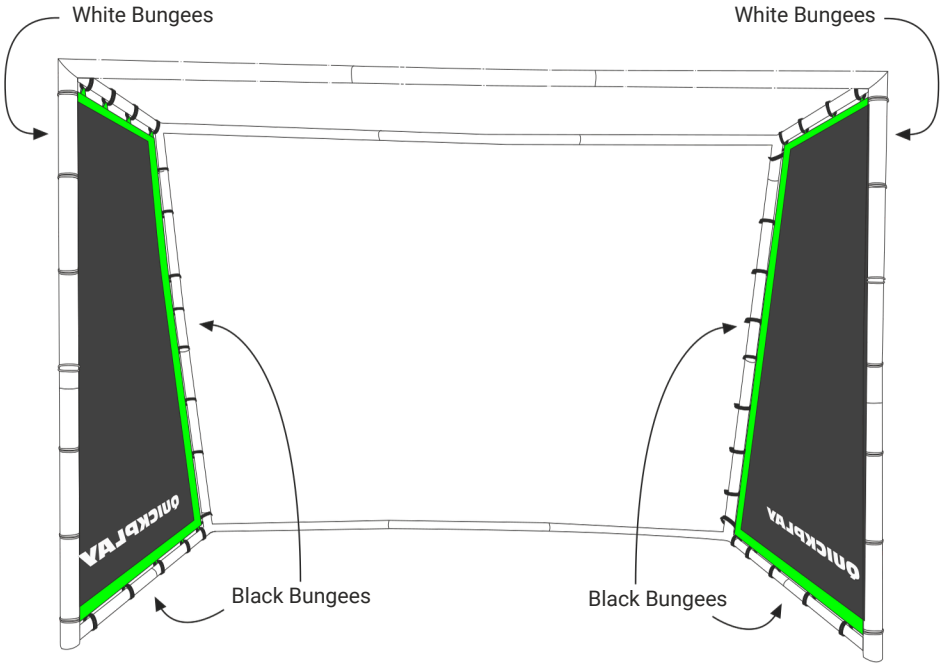

If required, replacement bungees are iavailable to purchase separately.

STEP 5

REBOUNDER NET ATTACHMENT

2 Attach the net to the back basebar with black bungees. Place a bungee in every other hexagon.

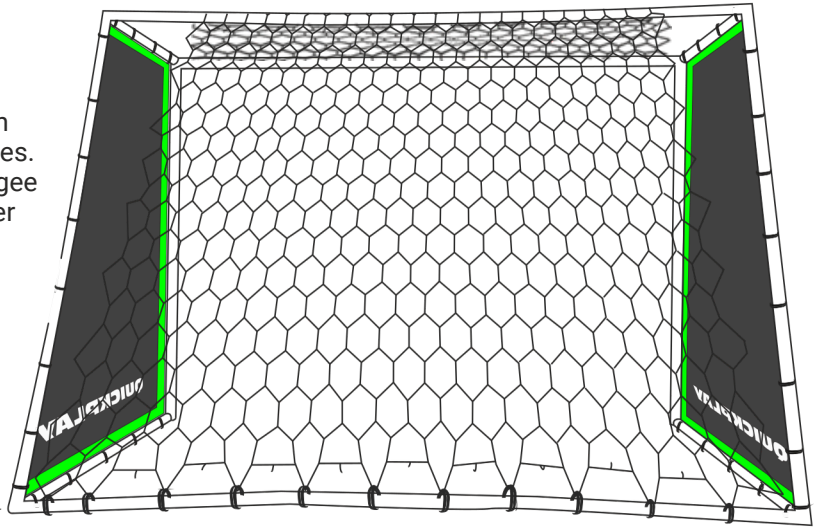

3 Lift the net over the back crossbar and pull to the front. Attach the net to the front crossbar placing a white bungee in every other hexagon.

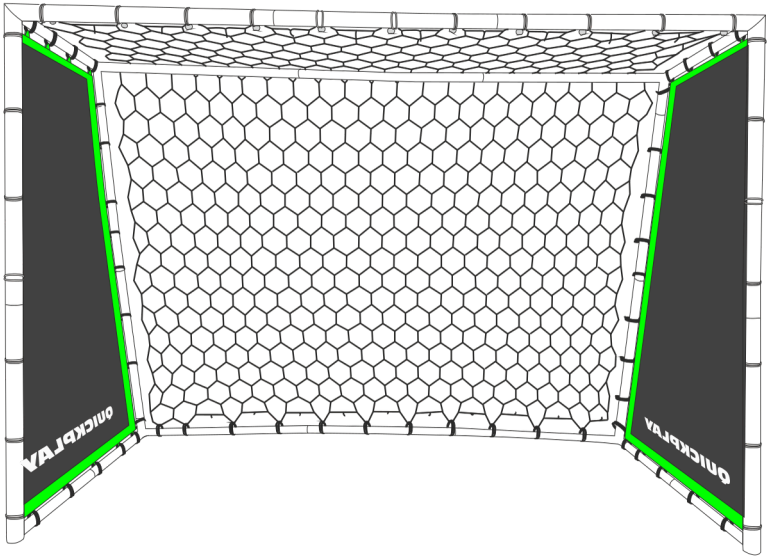

NET ORIENTATION



Please ensure the rebounder net is the correct way up when attaching.

STEP 6

REBOUNDER NET ATTACHMENT

4 Undo one bungee at atime starting at the base and add a section of the net. Work up the back and over the top.

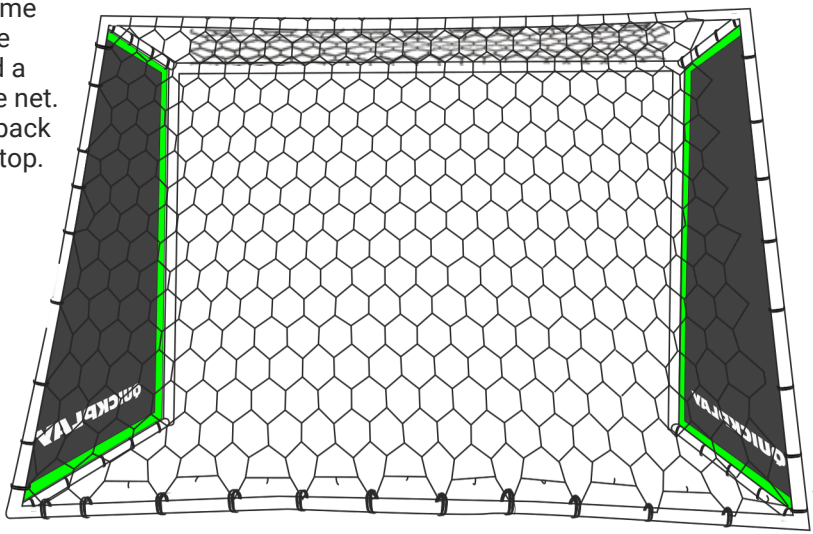

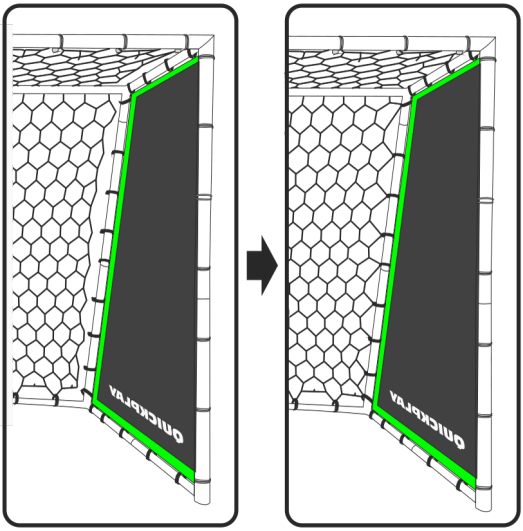

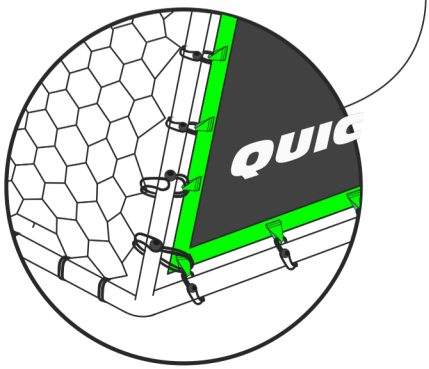

5 Repeat for the other side panel.

Pull the net tight so that it is under tension.

In the back corners of the side panels, 2 bungees may need to go through the single tab (as shown above) if required.

WARNINGS & USAGE GUIDELINES:

1. Must be assembled by an adult.
2. This product is not suitable for children under 5 yrs of age.
3. Only use on a flat surface.
4. Check the product is fully assembled before use.
5. Always exercise caution when moving the product.
6. Ensure the product is secured to the ground with the provided U-pegs before use.
7. If using on hard surfaces, anchor with sandbags or goal weights (sold separately).
8. Do not climb or hang on the product.
9. Regularly check the goal for wear and tear. Stop using if any part of it breaks. Failure to do so may result in injury.
10. Not suitable for use in high winds.